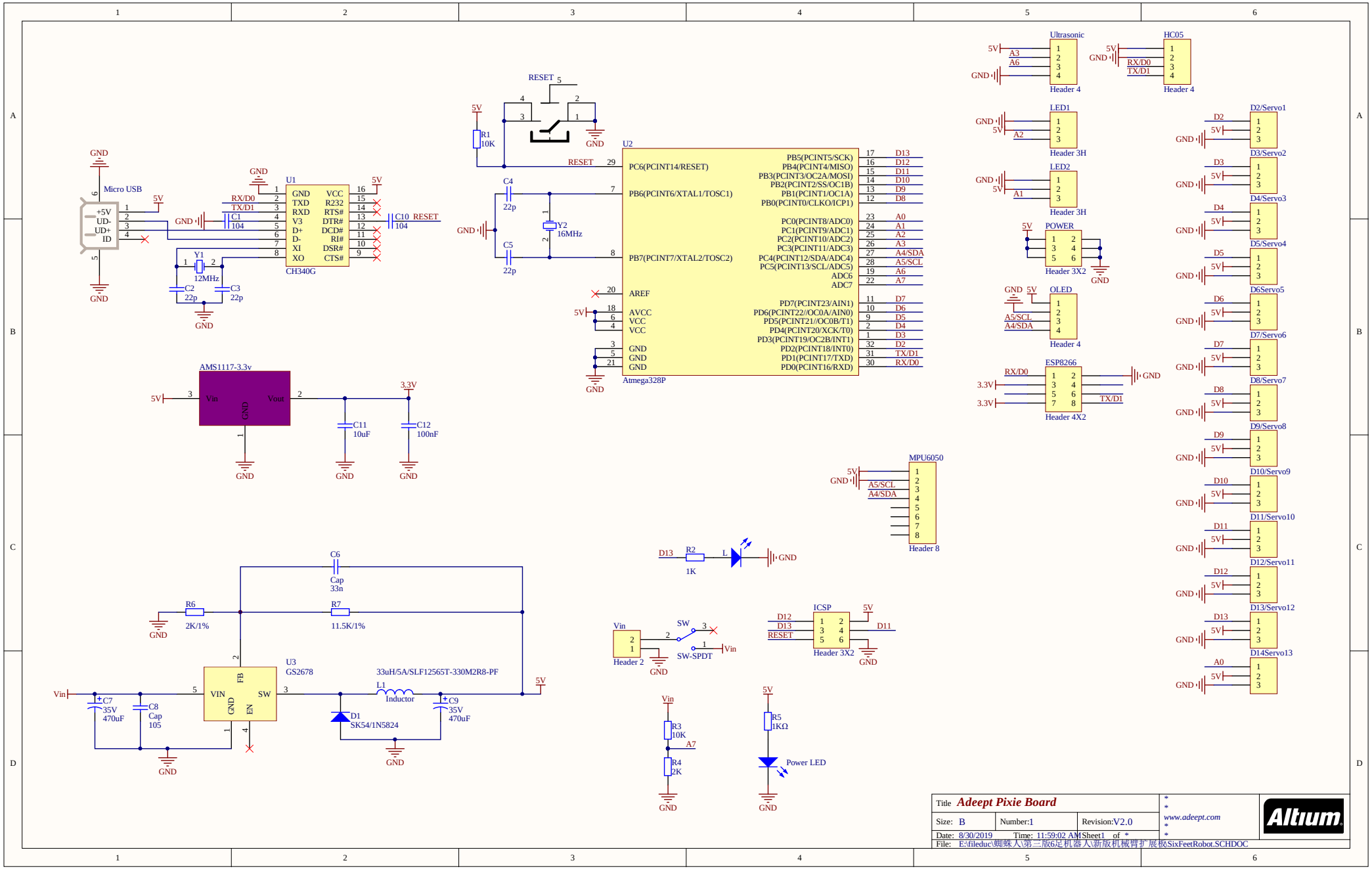

Micro USB
+5V
UD-
UD+
ID
GND
5V
U1
CH340G
GND
TXD
RXD
V3
D+
D-
XI
XO
VCC
R232
RTS#
DTR#
DCD#
RI#
DSR#
CTS#
RX/D0
TX/D1
C1
104
C10
104
RESET
Y1
12MHz
C2
22p
C3
22p
AMS1117-3.3v
Vin
Vout
3.3V
C11
10uF
C12
100nF
RESET
R1
10K
C4
22p
C5
22p
Y2
16MHz
U2
Atmega328P
PC6(PCINT14/RESET)
PB6(PCINT6/XTAL1/TOSC1)
PB7(PCINT7/XTAL2/TOSC2)
AREF
AVCC
VCC
GND
PB5(PCINT5/SCK)
PB4(PCINT4/MISO)
PB3(PCINT3/OC2A/MOSI)
PB2(PCINT2/SS/OC1B)
PB1(PCINT1/OC1A)
PB0(PCINT0/CLKO/ICP1)
PC0(PCINT8/ADC0)
PC1(PCINT9/ADC1)
PC2(PCINT10/ADC2)
PC3(PCINT11/ADC3)
PC4(PCINT12/SDA/ADC4)
PC5(PCINT13/SCL/ADC5)
ADC6
ADC7
PD7(PCINT23/AIN1)
PD6(PCINT22//OC0A/AIN0)
PD5(PCINT21//OC0B/T1)
PD4(PCINT20/XCK/T0)
PD3(PCINT19/OC2B/INT1)
PD2(PCINT18/INT0)
PD1(PCINT17/TXD)
PD0(PCINT16/RXD)
D13
D12
D11
D10
D9
D8
A0
A1
A2
A3
A4/SDA
A5/SCL
A6
A7
D7
D6
D5
D4
D3
D2
TX/D1
RX/D0
Ultrasonic
Header 4
HC05
LED1
Header 3H
LED2
POWER
Header 3X2
OLED
ESP8266
Header 4X2
MPU6050
Header 8
D2/Servo1
D3/Servo2
D4/Servo3
D5/Servo4
D6Servo5
D7/Servo6
D8/Servo7
D9/Servo8
D10/Servo9
D11/Servo10
D12/Servo11
D13/Servo12
D14Servo13
D13
R2
1K
L
C6
Cap
33n
R6
2K/1%
R7
11.5K/1%
U3
GS2678
FB
VIN
SW
GND
EN
33uH/5A/SLF12565T-330M2R8-PF
L1
Inductor
C7
35V
470uF
C8
Cap
105
D1
SK54/1N5824
C9
35V
470uF
Vin
Header 2
SW
SW-SPDT
ICSP
Header 3X2
R3
10K
R4
2K
R5
1KΩ
Power LED
Title Adeept Pixie Board
Size: B
Number:1
Revision:V2.0
Date: 8/30/2019
Time: 11:59:02 AM
Sheet1 of *
File: E:\fileduc\蜘蛛人\第三版6足机器人\新版机械臂扩展板\SixFeetRobot.SCHDOC
www.adeept.com
Altium